7. EXPLODED VIEW

▼The parts of refrigerator and the shape of each part are subject to change in different models

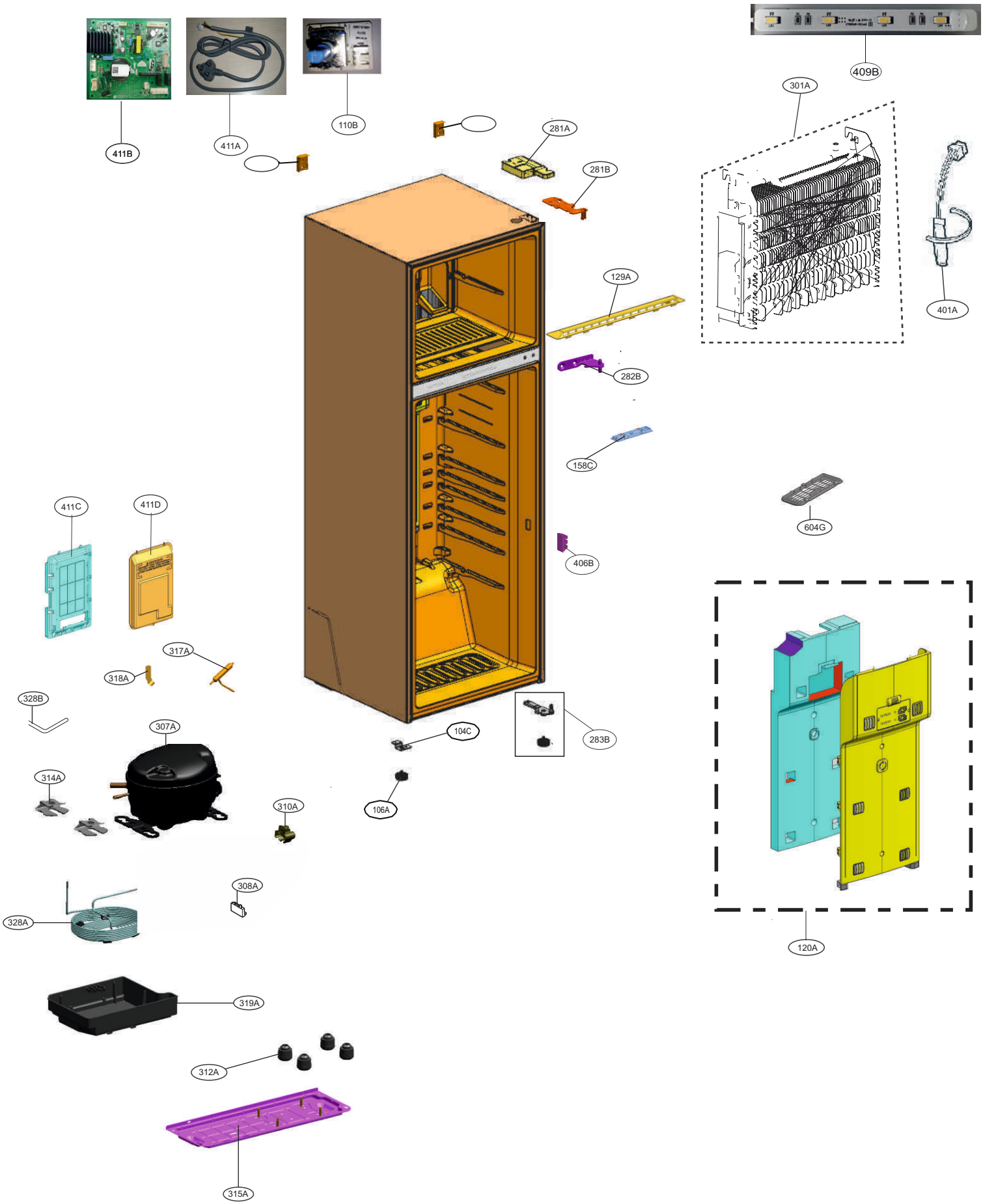

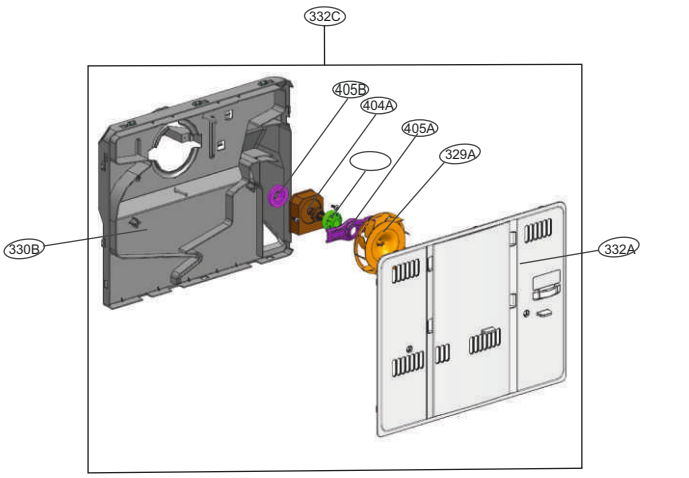
332C
405B
404A
405A
329A
330B
332A

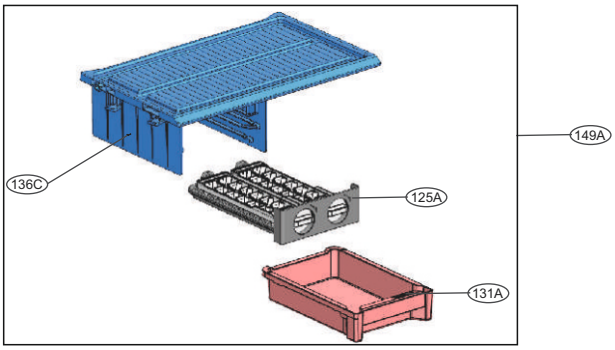
149A
136C
125A
131A

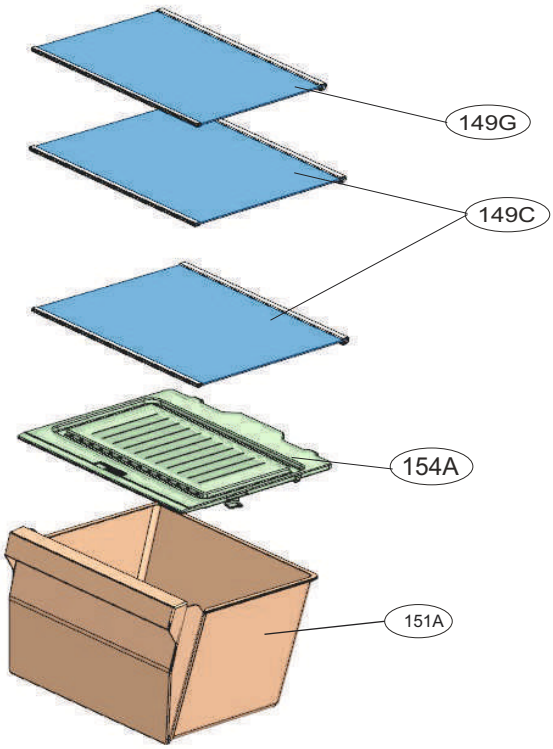
149G
149C
154A
151A

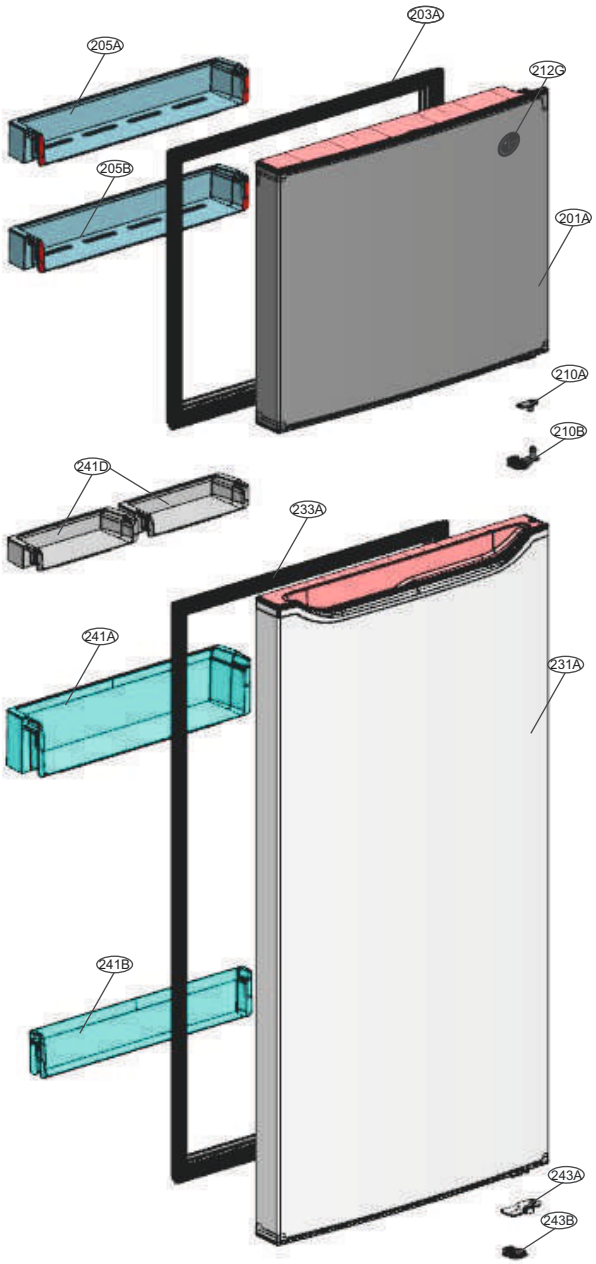
203A
205A
212C
205B
201A
210A
210B
241D
233A
241A
231A
241B
243A
243B